Paloma

boss



The times and places we share with other people give our lives purpose and meaning. So, it is essential that the spaces we create are focussed on people and how they interact with their surroundings. Paloma has been designed to create a human and agile solution, to meet, work, relax, and enjoy.

Paloma

boss



Paloma

Collection



With its sculptured, embracing form, the Paloma collection is inspired by relationships and functions of things we value in our lives every day. Comfortable, beautiful, and focussed on the needs of the individual.





Paloma

Meeting

Offices exist to bring people together as part of a shared purpose and culture. They are not merely places of work. They offer the spaces that allow people to realise their potential, develop relationships, learn, share information, have ideas and create new things.

The Paloma swivel option with either a four or five star base make it the perfect choice for meeting rooms and touchdown working.

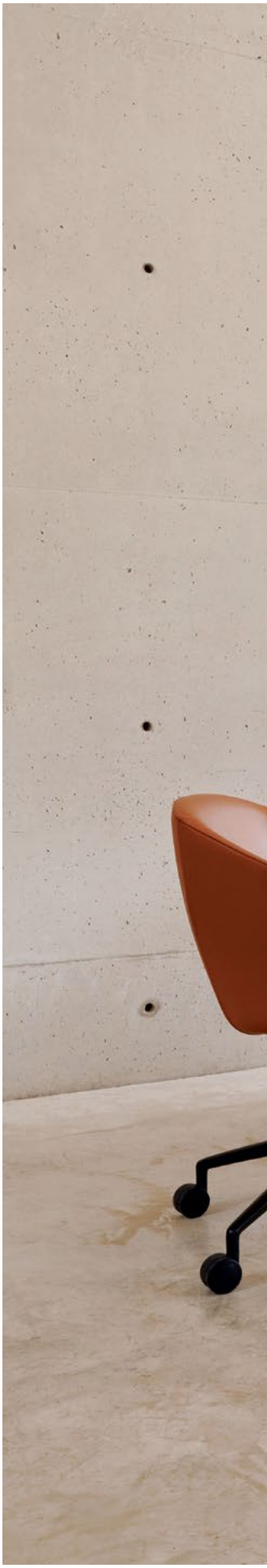





Paloma

Lux Café

The design of Paloma makes it a product that is equally comfortable in the high street, home, or workplace. The café option, coupled with the softly moulded form of the seat and back make Paloma a comfortable and practical solution for cafés and breakout spaces. The tactile quality of Paloma emphasises its human-design and makes it a chair that people enjoy sitting in.



Paloma

Lounge

Paloma Lounge is a comfortable and beautiful place to wait and relax. It wears its ergonomic excellence lightly. The sculpted lines of the seat and back, combined with meticulous stitch details and generous upholstery, are designed to deliver outstanding levels of comfort. This makes Paloma a great choice for a wide range of settings.


WRIGHT
HOUSES
HOUSES FOR OUR TIME



Paloma

Plush

Softened with a sartorial touch that is clear in every detail, the opulent folds on the inside of the backrest deliver a mellower level of luxury to the Paloma Collection.



Paloma Collection



Paloma

Stools

The Paloma family is also available as a stool, offered in two heights, suitable for bars and counters. Following the contours of the collection, the Paloma bar stool continues to be supportive with an innate ability to enhance any setting and harmonise any space.



Paloma

Details









Ergonomic comfort combined with world class attention to detail, a diverse choice of base, paint and upholstery finishes, bring you a truly adaptive range of seating that is every bit as agile as your workplace.

Meeting



PAL/4



PAL/1



PAL/5/HAT

Lounge



PLL/3



PLL/4



PLL/1

Plush



PLP/1



PLP/4



PLP/3

Bar Stool



PAL/10/L



PAL/10/H



PAL/2



PAL/3



PAL/4/HAT



PLL/4



PLL/3



PLL/2



PLP/4



PLP/2



PLP/3

Paloma

Specifications

Meeting

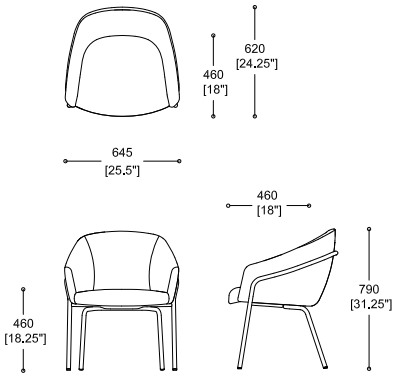

Meeting - 4 Leg (Steel) - PAL/1

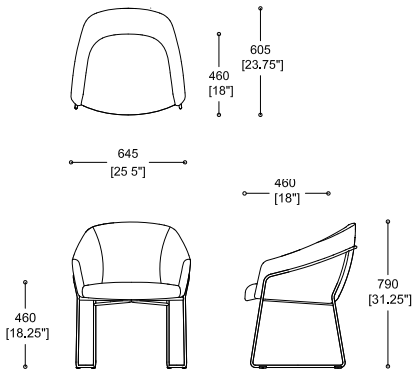

Meeting - Skid (Steel) - PAL/2

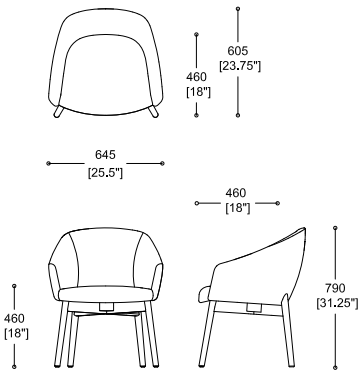

Meeting - 4 Leg (Wooden) - PAL/3

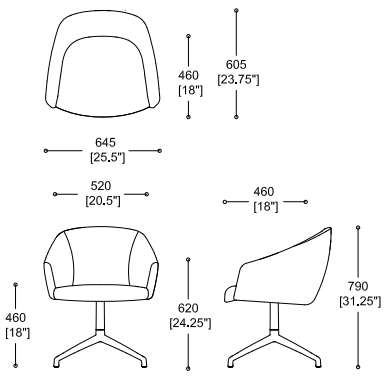

Meeting - 4 Star - PAL/4

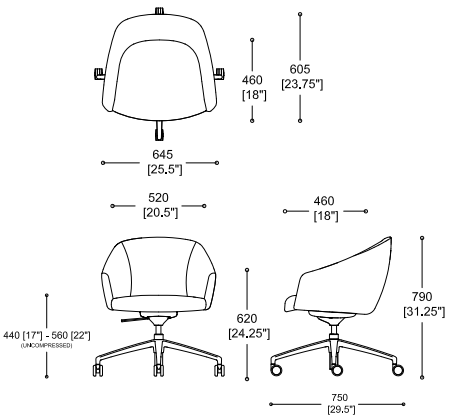

Meeting - 4 Star HA on castors - PAL/4/HAT

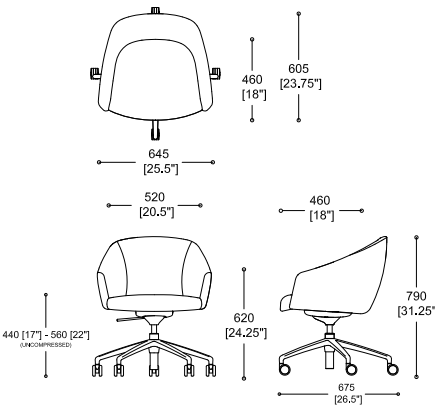

Meeting - 5 Star HA on castors - PAL/5/HAT

Bar Stool

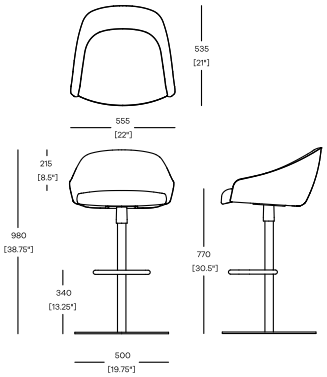

Bar Stool - PAL/10/H

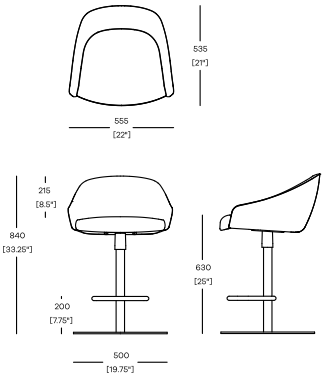

Counter Height Stool - PAL/10/L

Lounge and Plush

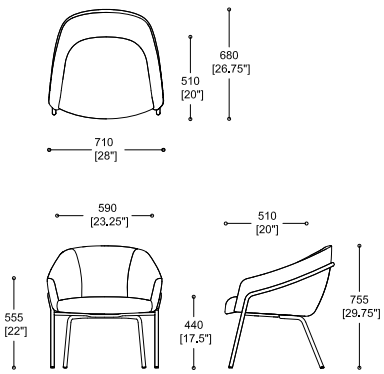

Lounge - 4 Leg (Steel) - PLL/1 - PLP/1

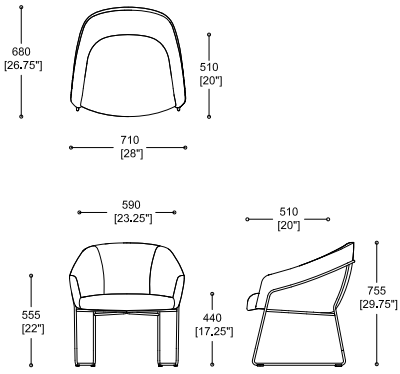

Lounge - Sled (Steel) - PLL/2 - PLP2

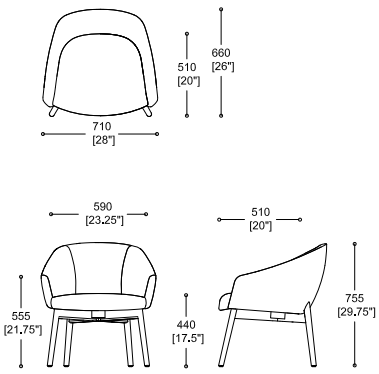

Lounge - 4 Leg (Wooden) - PLL/3- PLP/3

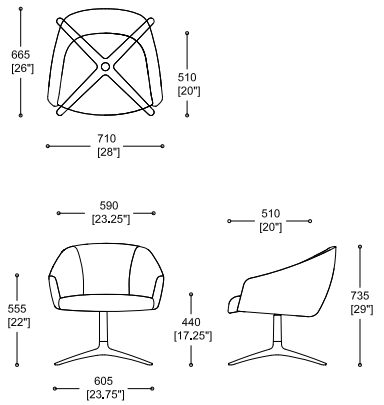

Lounge - 4 Star (Swivel) - PLL/4 - PLP/4

RAL frame colours

Custom RAL colours are also available based on a MOQ of 20 pieces of seat and frames. (Extended lead time applies).

040 50 50 070 70 80 220 70 10 240 20 22

130 30 20 060 60 05 9016 9005

Colours may vary slightly to the physical plastic or frame colours. These swatches should only be used as a guide.

Timber Frame Show Wood

Oak

Upholstery

The products in this brochure are upholstered in the following finishes:

Camira
Yoredale Walden UDA13 / Yoredale Dacre UDA21 / Yoredale Kidstone UDA02 / Yoredale Wharfe UDA18 / Yoredale Simonstone UDA05 /

Spinneybeck
SA7012 / SA2001

Kvadrat
Mosaic 722 / Still 771 / Apparel 683 / Mosaic 472 / Hero 311 / Hero 481 / Hero 981 / Still 961 / Merit 030 / Merit 017

Elmosoft
33004 / 11056 / 33004 / 08055



Paloma

boss

We shape the spaces we share with others to address our most basic human needs. For comfort, beauty, company, purpose and relaxation. Paloma has been designed with these very human needs in mind. Just like the people it has been designed for, it is just at home in a work, living, lounge or café space.

sales@bossdesign.com
www.bossdesign.com

Headquarters

UK
Boss Drive Dudley
West Midlands
DY2 8SZ
T: +44 (0)1384 455 570

USA
North American HQ
2014 Chestnut Street
High Point N.C. 27262
T: +1 844-353-7834

Showrooms

UK - London
7 Clerkenwell Road
London
EC1M 5PA
T: +44 (0)20 7253 0364

Manchester
The Lightwell
25-27 Booth Street
Manchester M2 4AF
T: +44 (0)161 711 0585

USA - Chicago
222 Merchandise Mart
Plaza, Suite 359
Chicago IL 60654
T: +1 844-353-7834

UAE - Dubai
Design House
Al Noor St. Al Sufouh 1
PO Box 117088 Dubai
T: +971 (0)443 788 99

Paloma

boss

bossdesign.com